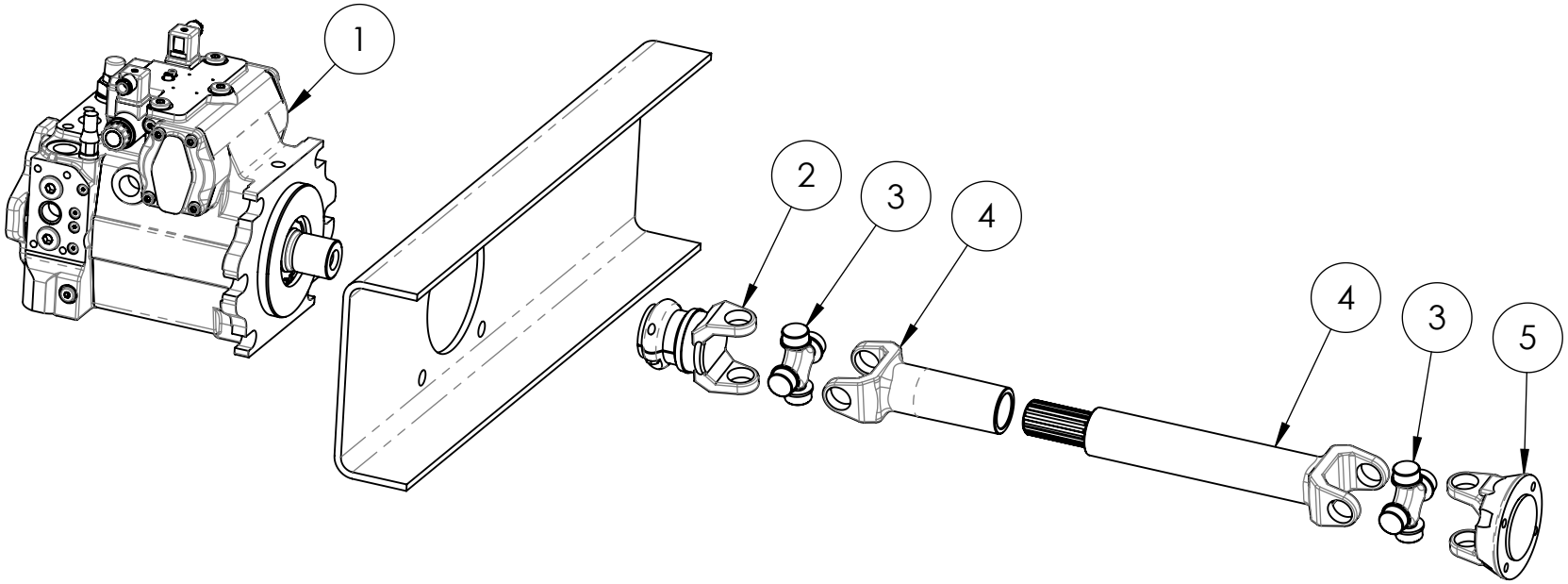

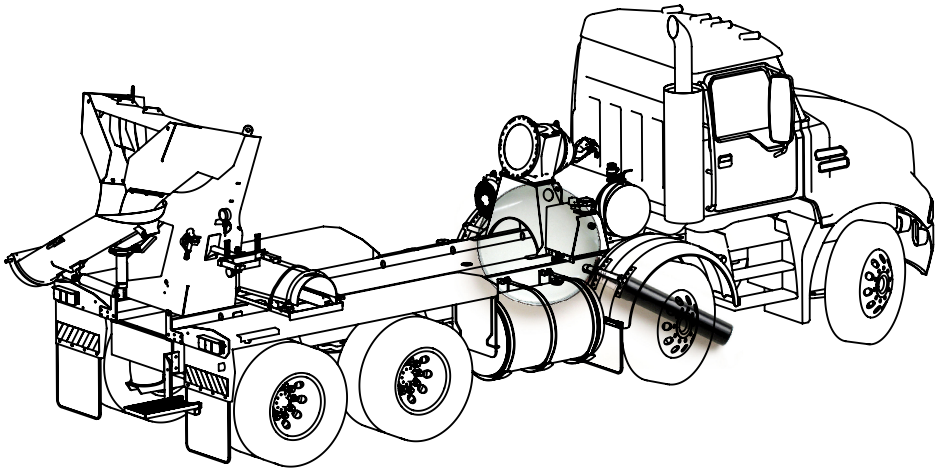

10

Dwg no:	BB-1110	Date:	2/12/2010

Mixers Australia. (P)+61732670800
(e) - admin@mixersaustralia.com
14 Huricane st, Banyo, QLD, Australia

All plans, drawings and designs supplied by Mixers Australia remain the property of Mixers Australia. All information derived there from or communicated must be treated as secret and confidential.The information contained within must not disclosed , duplicated or used in any way which would be to the detriment of Mixers Australia, without the express written consent of Mixers Australia.

Item #	Description	Part Number
1	Rexroth pump (71 cc std on 6.4ntr & 7.6mtr mixers)	HY.REXELEPMP71
1	Rexroth pump (90 cc std on 9mt mixers)	HY.REXELEPMP90
2	Split clamp 21 tooth to suit 71 cc pump	DL.CLMPYOK21
2	Split clamp 23 tooth to suit 90 cc pump	DL.CLMPYOK23
3	Uni joint with grease nipple in each cap	DL.UNIJNT4NIPP
4	Complete pto shaft made to length to suit 71 cc pump	DL.21TOOTHSHAFT
4	Complete pto shaft made to length to suit 90 cc pump	DL.23TOOTHSHAFT
5	4 bolt flange	DL.PTOFLANGE

Notes:

Dwg no:	BB-1110	Date:	2/12/2010

Mixers Australia. (P)+61732670800
(e) - admin@mixersaustralia.com
14 Huricane st, Banyo, QLD, Australia

All plans, drawings and designs supplied by Mixers Australia remain the property of Mixers Australia. All information derived there from or communicated must be treated as secret and confidential.The information contained within must not disclosed , duplicated or used in any way which would be to the detriment of Mixers Australia, without the express written consent of Mixers Australia.